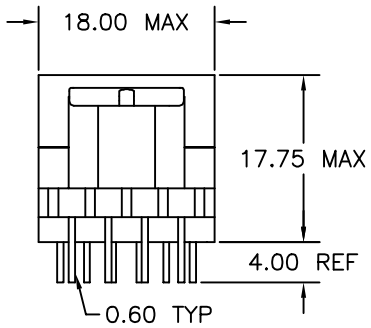

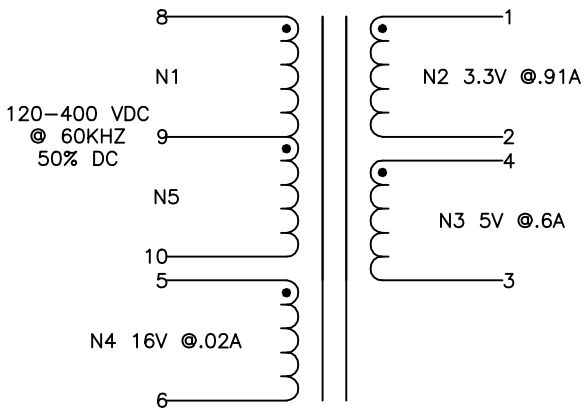

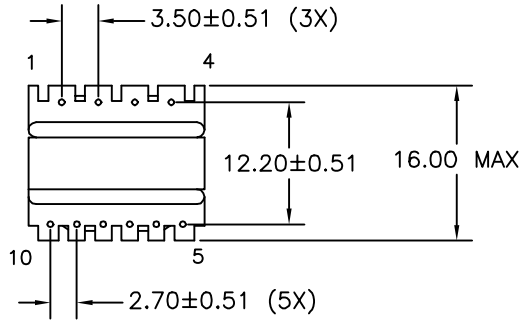

NOTE:
POLARITY SHOWN IS FOR THE TRANSFORMER. FOR CORRECT FLYBACK OPERATION, CONNECT B+ TO PIN 10.

ELECTRICAL SPECIFICATIONS

L @ 1kHz 10mA – (8–10) 3.25mH ±10%

LL @ 100kHz 10mA – (8–10) 54.8μH TYP, TOL TBD
(WITH 1–6 SHORTED)

TURNS RATIO – ±3%
- N1/N5:N2 – 1:0.033
- N1/N5:N3 – 1:0.050
- N1/N5:N4 – 1:0.144

DCR – OHMS TYP, TOL TBD
- N1/N5 – 6.20
- N2 – 0.021
- N3 – 0.033
- N4 – 0.956

HIPOT – 4000VAC 1SEC
N1,N4,N5 TO N2,N3

	REVISION	DATE
0	PRELIMINARY	03/25/05
A	RELEASED	03/31/05

MARKINGS
544–DTAE CODE
VP11–063

LOCATION
TOP OF CORE

DESCRIPTION
3.3V/5V 7VA VIPER 12A FLYBACK

TOLERANCE UNLESS OTHERWISE SPECIFIED
2 PLACE DECIMALS ±.010
3 PLACE DECIMALS ±.005
FRACTIONS ±1/64
ANGLES ±1/2°

PROPRIETARY INFORMATION
PROPERTY OF
CRAMER COIL & TRANSFORMER CO.
DUPLICATION AND/OR DISTRIBUTION
BY PERMISSION ONLY

CUSTOMER

Cramer Coil & Transformer Co., Inc.

G:\DATA\SPECS\ENG\CVP\11–063

DR. MEC — DATE 03/25/05

APPD. JDB — DATE 03/31/05

CUSTOMER PART NUMBER — REV

CRAMER PART NUMBER CVP 11–063 — REV A